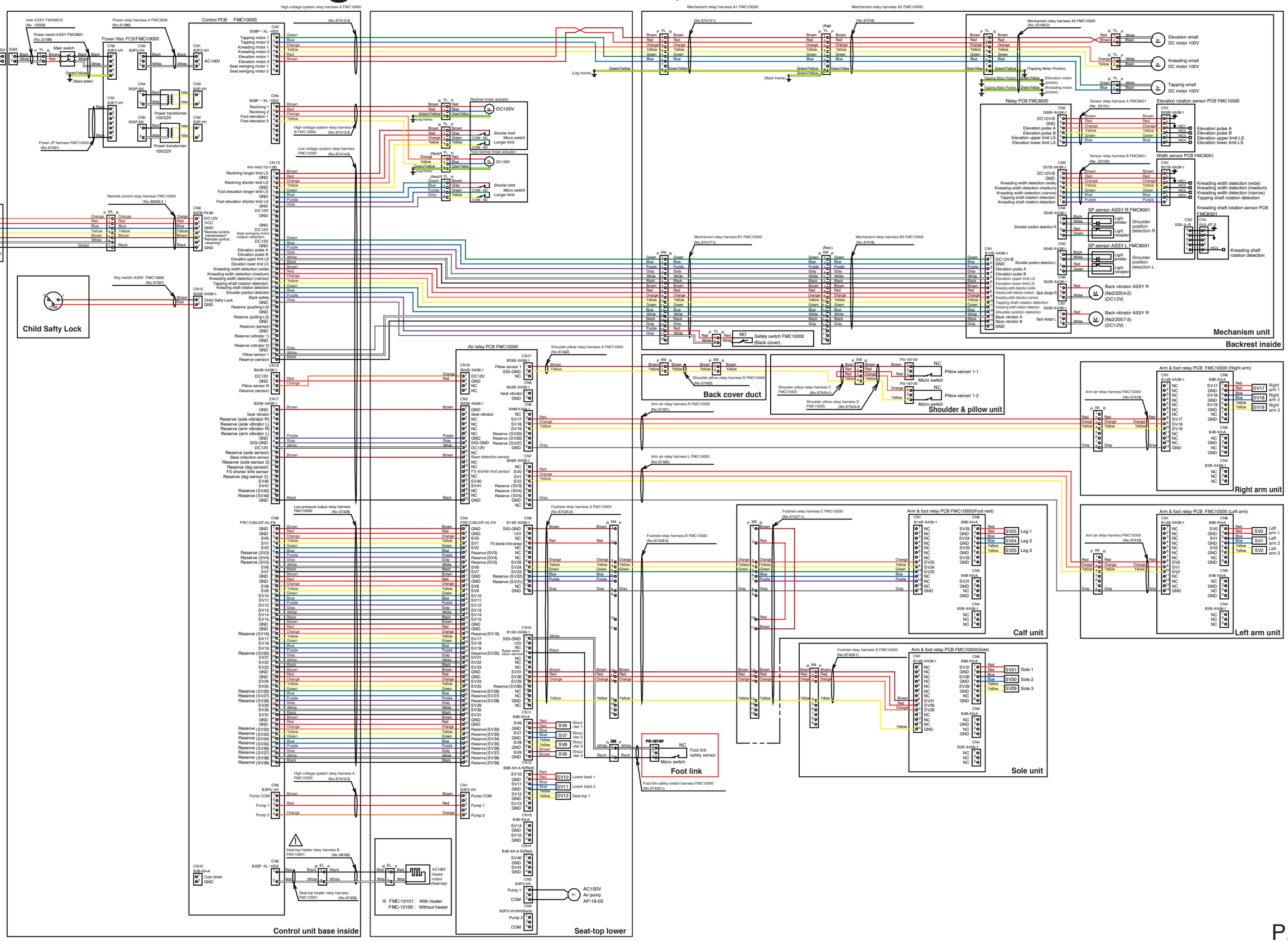2-2.Connection diagram FMC-10100,10101